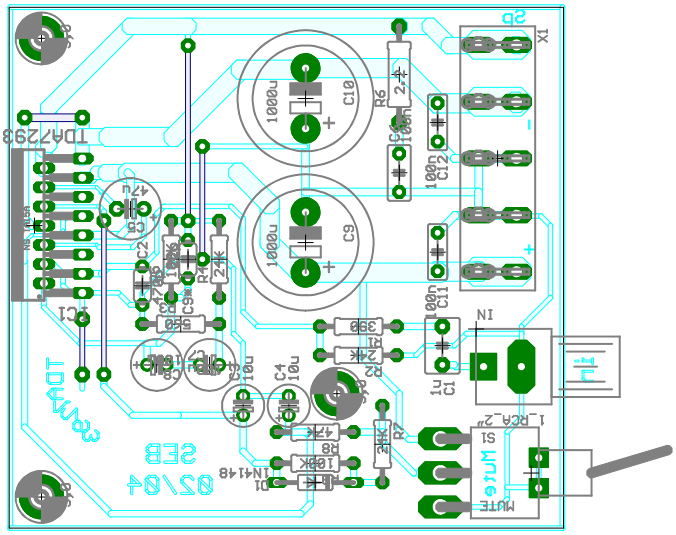
TDA7293
SEB
02/04
1000u
C10
C9
R6
C12
C11
C1
C4
C5
C2
R4
R1
R2
R7
R8
D1
1N4148
IN
S1
MUTE
X1
SD

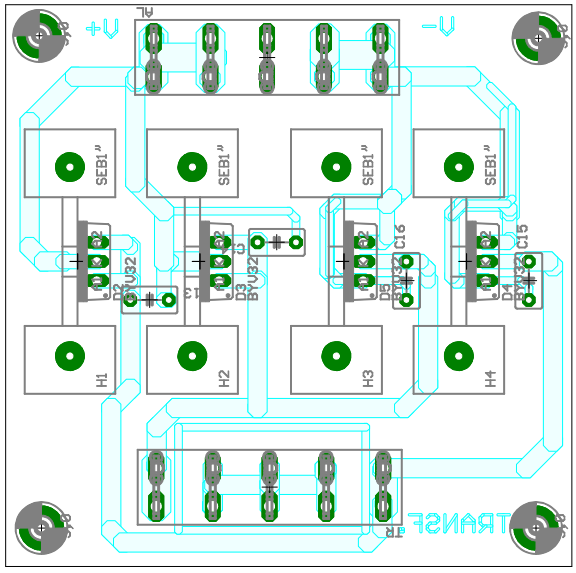
AL
SEB1"
H1
H2
H3
H4
D2
D3
D4
D5
C13
C15
C16
BYV32
TRANSF

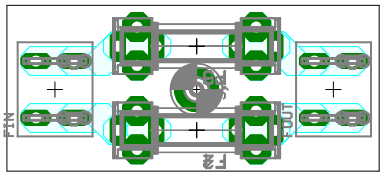
FIN
FOUT