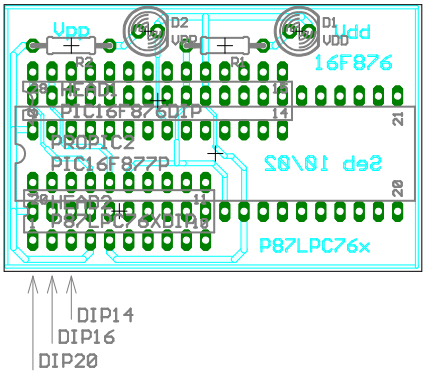
Vpp
D2
VPP
R2
R1
D1
VDD
Vdd
16F876
PIC16F876DIP
PROPIC2
PIC16F877P
Sep 10\02
P87LPC76x
DIP14
DIP16
DIP20